NOTES:

1. RECOMMENDED P.C. BOARD HOLE DIA. (1.50)/.059 MIN.

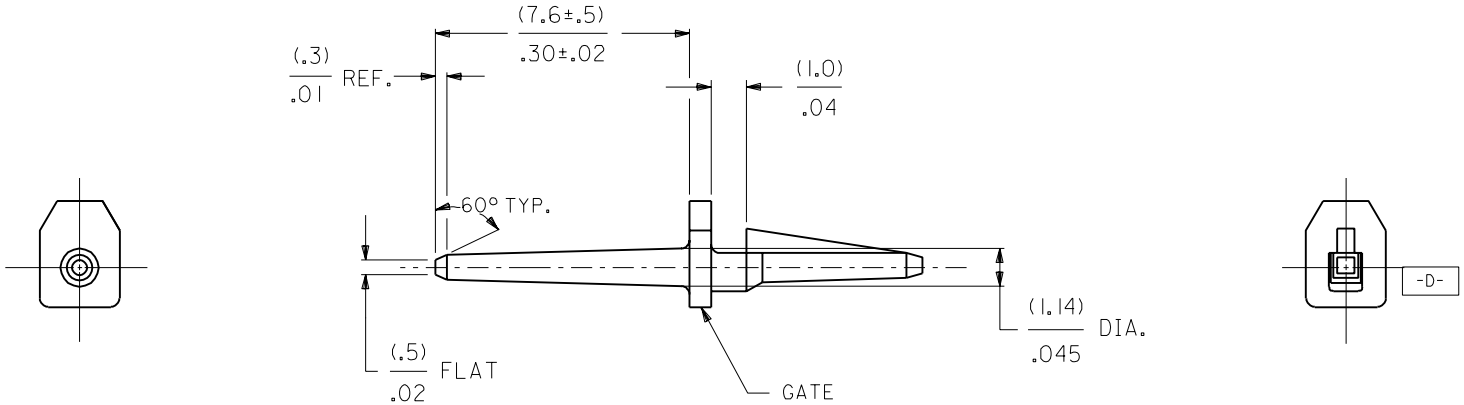

4161-2

15-04-9210

LTR.	REVISIONS	LTR.	REVISIONS
____	SEE SHEET 1	____	SEE SHEET 1
____	SEE SHEET 1	____	SEE SHEET 1
____	SEE SHEET 1	____	SEE SHEET 1
____	SEE SHEET 1	____	SEE SHEET 1
____	SEE SHEET 1	____	SEE SHEET 1
____	SEE SHEET 1	____	SEE SHEET 1
____	SEE SHEET 1	L	SEE SHEET 1

DIMENSIONS SHOWN (METRIC) INCH

UNLESS OTHERWISE SPECIFIED TOLERANCES: ANGULAR ± 1/2°

	INCH	METRIC
3 PLACE	± .010	---
2 PLACE	± .014	± .25
1 PLACE	---	± .36

DRAFT WHERE APPLICABLE MUST REMAIN WITHIN DIMENSIONS

DRWG. BY GUZIK | CHK'D. BY PATEL

APP'D. BY LENZ | SCALE :

REVISE ONLY ON CAD SYSTEM

TITLE (POLARIZING PEG) FOR KK (2.54)/.100

MOLEX INCORPORATED LISLE, ILL. 60532 U.S.A.

SHEET NO. 2 | DATE 10/16/87

PART NO. | DRWG. NO. SD-4161

FILE NAME S4161X2

THIS DRAWING CONTAINS INFORMATION THAT IS PROPRIETARY TO MOLEX INC. AND SHOULD NOT BE USED WITHOUT WRITTEN PERMISSION.

DIV. KK | SIZE B